LHT SERIES-HIGH TEMPERATURE

LHT12-100 (12V100Ah)

LEOCH BATTERY

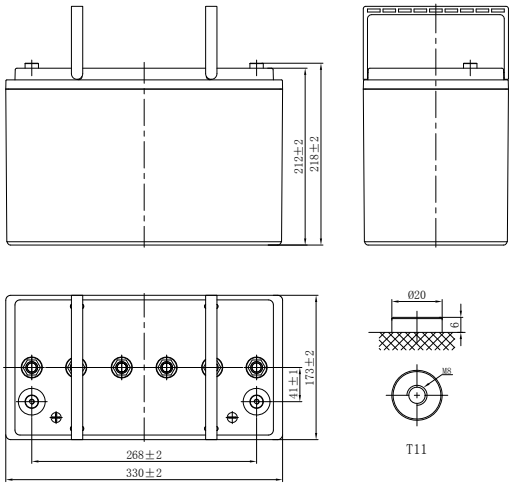

CHARACTERISTICS

Item		Specifications
Rated Voltage		12V
Nominal Capacity (35˚C)	C_{10},1.80V/cell	100Ah
Dimension	Length	330mm (13.0inches)
	Width	173mm (6.81inches)
	Container Height	212mm (8.35inches)
	Total Height	218mm (8.58inches)
Approx Weight		33.5kg (73.9lbs)
Terminal		T11(M8)
Container Material		ABS (UL94 V-0)
Short-circuit current		2000A
Internal Resistance (35˚C)		Approx 8 mΩ (Fully charged)
Operating Temp. Range	Discharge	-40~65˚C (-40~149°F)
	Charge	-20~45˚C (-4~113°F)
	Storage	-20~50˚C (-4~122°F)
Nominal Operating Temp. Range		25±10˚C (77±18°F)
Max.Charging Current (35˚C)		0.25C
Charge voltage (35˚C)	Standby Use	Cycle Use
	2.23-2.27V/cell	2.35-2.40V/cell
Temp. Coeffcient	-3mV/cell/˚C	-5mV/cell/˚C
Effect of temp. to Capacity	40˚C (104°F)	103%
	35˚C (95°F)	100%
	0˚C (32°F)	86%
Self Discharge	LHT series batteries can be stored for up to 6 months at 35°C (95°F) and then a freshening charge is required. For higher temperatures the time interval will be shorter.	

DISCHARGE TABLE

Constant Current Discharge (Amperes) at 35°C (95°F)											
F.V/Time	30min	45min	1h	2h	3h	4h	5h	6h	8h	10h	20h
1.85V/cell	72.4	55.9	47.8	31.0	23.3	19.1	16.0	14.1	11.3	9.69	5.17
1.80V/cell	78.6	60.3	50.5	33.3	25.0	20.3	17.0	14.9	11.9	10.0	5.35
1.75V/cell	85.5	65.7	55.0	34.6	26.0	21.0	17.4	15.4	12.3	10.3	5.49
1.70V/cell	93.3	70.8	58.2	36.5	27.4	21.9	18.4	16.1	12.8	10.7	5.63
1.67V/cell	98.5	74.9	60.2	37.8	28.5	22.8	19.0	16.7	13.2	11.0	5.80
1.60V/cell	105.1	77.9	62.0	38.8	29.2	23.3	19.4	17.0	13.4	11.2	5.89

Constant Power Discharge (Watts/cell) at 35°C (95°F)											
F.V/Time	30min	45min	1h	2h	3h	4h	5h	6h	8h	10h	20h
1.85V/cell	139.4	108.5	93.2	60.7	45.8	37.7	31.8	27.9	22.5	19.4	10.3
1.80V/cell	149.2	116.1	97.8	64.8	49.0	39.8	33.5	29.4	23.6	20.0	10.7
1.75V/cell	160.8	125.5	106.1	67.2	50.7	41.0	34.2	30.3	24.3	20.5	10.9
1.70V/cell	174.6	134.7	112.0	70.6	53.3	42.8	36.1	31.7	25.3	21.2	11.2
1.67V/cell	182.7	141.2	115.0	72.8	55.2	44.3	37.1	32.7	26.1	21.8	11.6
1.60V/cell	193.6	146.0	117.8	74.3	56.4	45.2	37.9	33.3	26.5	22.2	11.7

LHT SERIES-HIGH TEMPERATURE

LHT12-100 (12V100Ah)

LEOCH BATTERY

APPLICATIONS

- Tele-communication base station
- High temperature station without air-condition
- Station in the open air
- Electric power system, UPS
- Solar energy, wind saving energy power supply

GENERAL FEATURES

- Design life up to 10 years at 35℃
- Specifically formulated heat resistant plastic case and cover optimizes compression, resists bulging and meets safety requirements (UL 94 V-0)
- Unique alloy inhibits corrosion under the highest temperature extremes
- Puncture resistant micro-porous glass mat separators extend life
- Epoxy-sealed posts eliminate leaks

STANDARDS

- Compliance with IEC 60896 Certified
- Classified as"Long Life" according to Eurobat
- UL, CE Approved
- Manufactured in Leoch®IATF 16949, ISO 45001, ISO 9001 and ISO 14001 certified production facilities

Discharge Characteristics

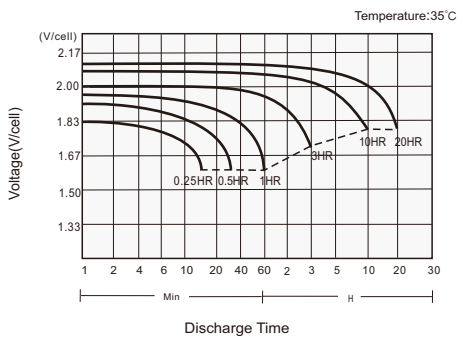

Charging Characteristics

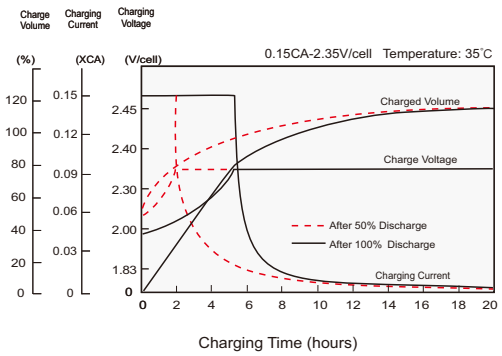

Temperature Effects in Relation to Battery Capacity

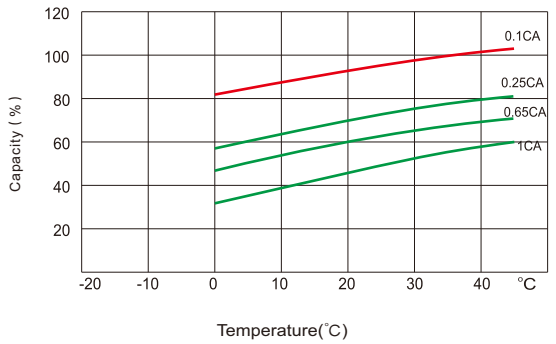

Self Discharge Characteristics

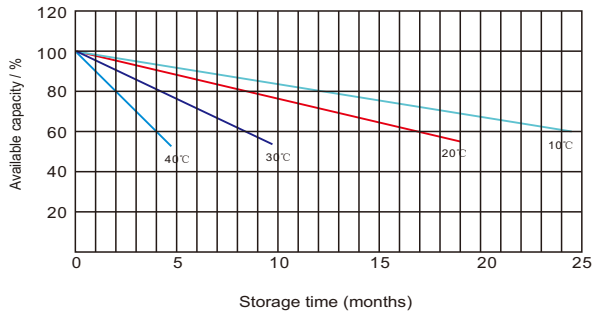

Leoch International Technology Ltd.
www.leoch.com

Leoch Batteries Pte Ltd
www.leoch.sg

Leoch Battery Corporation
www.leochamericas.com

Leoch Europe S.A.
www.leoch.eu

Data above is recommended and the picture is only for battery effect display, Leoch reserve the final right of explanation.
© LEOCH. All rights reserved.Trademarks and logos are the property of LEOCH and its affiliates unless otherwise noted.Subject to revisions without prior notice. E&OE.

Publication No.:LB-LHT12-100-PD-EN-V2.0-20240129